FOLIA FORESTALIA POLONICA
Seria B, zeszyt 30, 1999

AN ATTEMPT OF APPLICATION OF THE AEROSTATIC BEARING FOR SPINDLE OF THE CIRCULAR SAW FOR WOOD

by Stanisław Kruś and Bolesław Kortylewski

Department of Machine Tools and Industrial Appliances
A. Cieszkowski Agricultural University of Poznań

In this study was examined lifting the spindle axis of prototype circular saw aerostatically beared in dependence upon the pressure changes of air supplying the bearing. Preliminary comparative studies were made of values of the effective vibrations of accelerations, and displacements on the supports of rolling- and aerostatic bearings.

Key words: aerostatic bearing, circular saw, spindle, vibrations, noise

INTRODUCTION

Working spindles of the circular saws for wood, on which are mounted cutting tools, traditionally are working on the supports being rolling bearings. In the time of exploitation of bearings their raceways, rings, and rolling elements are wearing down showing deviations from proper shape, what directly influences the increase of mechanical vibrations and noise of the whole machine tool. The possibility to replace of rolling bearings for spindles of circular saws by other solutions of supports could contribute to lowering of the level of noise emitted, and propagation of mechanical vibrations. One of the ways is application of the aerostatic bearings, which are characterised by high damping properties of vibrations (Cempel 1985, Kwapisz 1991).

Aerostatic bearings due to small coefficient of dynamic viscosity of air, and constant its offtake in the open circuit, are characterised by low temperature, practically unchangeable in course of work. Another their considerable advantage is their practically unlimited durability, and high exactness of rotations. Aerostatic bearings are showing very beneficial property resulting on that in the proper range of rotational speeds, their axis of spindle rotations could be main axis of inertia, so called mass axis.

It can be adopted, that the spindle is rotating along the mass axis, if its displacement in respect to the geometrical axis is few times lower than the radial clearance. Such property results from the course of amplitude – frequency characteristics of bearing, presented on Fig. 1 (Kwapisz and Rafałowicz 1976).

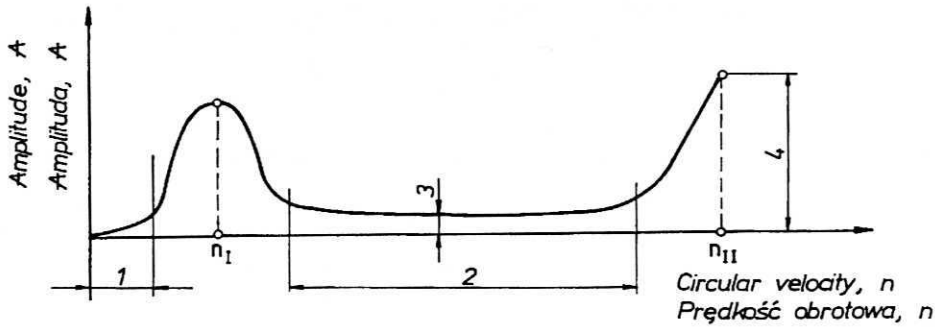

Fig. 1. An amplitude frequency characteristic of aerostatic bearing
1 – I work range
2 – II work range
3 – II distance between geometrical axis and mass axis
4 – radial clearance
Rys. 1. Charakterystyka amplitudowo – częstotliwościowa łożyska aerostatycznego
1 – I zakres pracy
2 – II zakres pracy
3 – odległość między osią geometryczną i osią masową
4 – luz promieniowy

The drawing is indicating on the existence of two characteristic rotational speeds n_I and n_{II}. The rotational speed n_I corresponds with the frequency of resonance of system spindle – air cushion, while the speed n_{II} is the rotation speed of the axis of pivot along the bearing bush axis.

The rotational speed n_{II} is the limit rotational speed of spindle, at which cross vibrations amplitude is equal radial clearance in bearing. From Fig. 1 results, that in wide II range of work, between rotational speeds n_I and n_{II}, spindle rotates along the axis close to mass axis. In the range II are working speed – rotational spindles with tools of low diameter (e.g. upper spindle mills), while in range I spindle with tools of greater diameters (e.g. circular saws), and therefore studies will be concerning this special range.

The general scope of this paper is to present possibilities of application of aerostatic bearings to the spindle of circular saw, in which it is traditionally mounted on the rolling bearings.

The particular scopes are: design of prototype circular saw with spindle aerostatically beared, and investigations of selected parameters of work of this spindle, and comparison of them with analogical parameters at rolling bearings.

MATERIALS AND METHODS

In the aerostastic bearings the lubricating element is the compressed air. The pressure of air layer between the pivot and bush is the source of lifting power of bearing, balancing external loading P. This pressure has to cause displacement e of pivot axis in direction to bush axis for the value not greater than $e \leq 0.7h_0$ {where h_0 – radial clearance $\frac{1}{2} = (h_1 + h_2)$ – Fig. 3} ensuring reliability and safety of work. On the Fig. 2 is presented

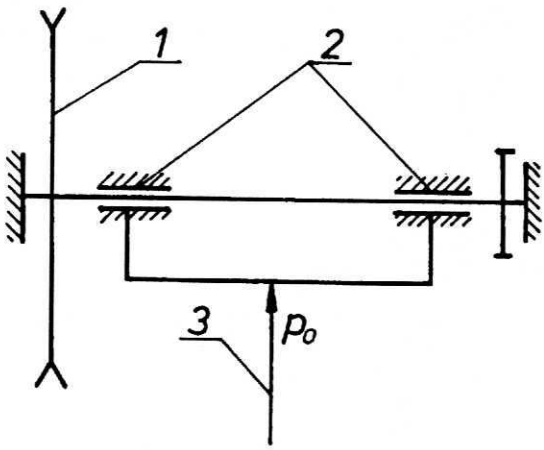

Fig. 2. Diagram of aerostatic spindle bearing:
1 – circular saw
2 – aerostatic bearings
3 – compressed air
Rys. 2. Schemat łożyskowania aerostatycznego wrzeciona:
1 – piła tarczowa
2 – łożyska aerostatyczne
3 – sprężone powietrze

diagram of aerostatic spindle bearing and on the Fig. 3 is presented diagram of spindle bearing and longitudinal (a) and transverse (c) sections of pivot with bush of aerostatic transverse bearing *chamberless* (clearances are indicated in enlargement). The definition "chamberless" results from the shape of inflow glands, by which is let air to the aerostatic space (Wrotny 1973). The simplest method was applied of feeding by *diaphragm chamberless* glands (Fig. 4), which are made directly in bush, or screwed in form of ready made elements into previously made openings in bush. Said glands are displaced on the periphery symmetrically, in two rows, in distance $l_w = 0.25L$ from the edge of bush. Disribution of pressure in the lubrication layer balancing force P is spatially very complicated. On the Fig. 3 b presented is distribution of pressure in longitudinal direction, while on the drawing 3c in transverse section. For the theoretical calculations it is adopted simplified model of air flow in slits of bearing, illustrated on the

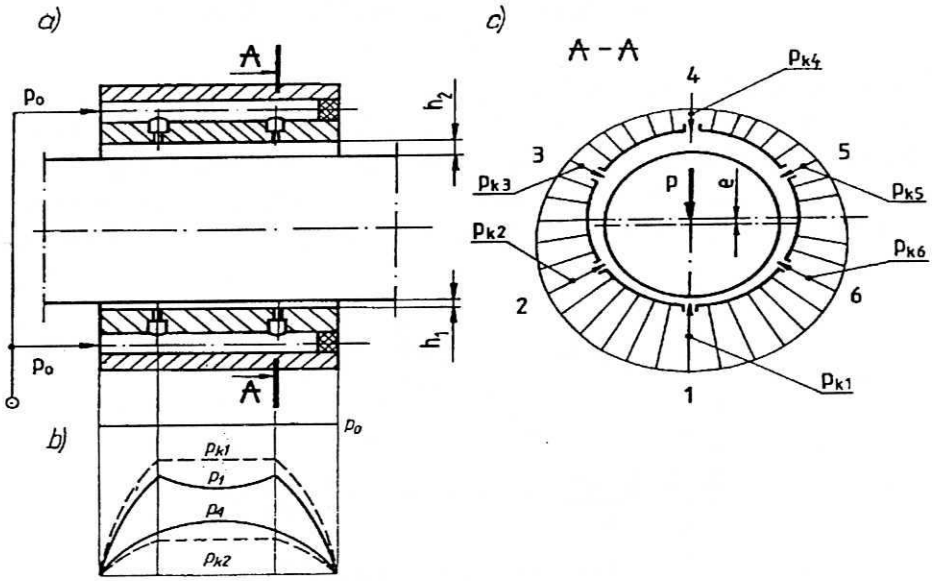

Fig. 3. An aerostatic transverse chamberless bearing:
a) longitudinal section
b) pressure distribution in longitudinal section:
——— real
--------- theoretical
c) pressure distribution in transverse section

Rys. 3. Łożysko aerostatyczne poprzeczne bezkomorowe:
a) przekrój wzdłużny
b) rozkład ciśnień w przekroju wzdłużnym:
——— rzeczywisty
--------- teoretyczny
c) rozkład ciśnień w przekroju poprzecznym

Fig. 3c, with the assumption, that the flow is laminar. In said model are marked concentric lines with symbols p_{k1} .....p_{k6}, their length reflects the value of existing pressure in various points of aerostatic space. Compressed air is flowing out into surrounding atmosphere from two sides through the slits with changeable height h. Simultaneously air flows inside bearing along the bush perimeter in directions of lowering pressure, going gradually to the longitudinal ports to atmosphere.

On the base of said rules (e.g. value of displacement e and method of supplying) were made two transverse aerostatic bearings, which are characterised by following parameters:

- width of pivot $d = 36$ mm
- effective length of bush $L = 54$ mm
- diameter and number of glands: $\varnothing = 0.6$ mm, $n = 36$
- fordesigned clearance of diameter $2h_0 = (h_1 + h_2) = 60$ μm
- maximum transverse force $P_{max} = 150$ N.

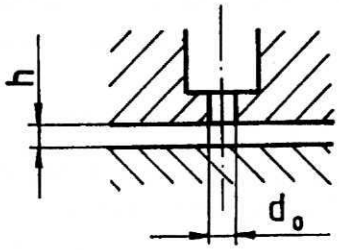

Fig. 4. Membrane chamberless gland:
h – radial clearance
d_0 – diameter of hole
Rys. 4. Dławik diafragmowy bez komory
h – luz promieniowy
d_0 – średnica otworu

In such way made bearings was seated, after prior adaptation of pivots, typical spindle of circular saw together with tightening collars and circular saw blade with diameter 315 mm driven by pulley. The spindle unit together with drive were mounted on the steel welded body, creating thus prototype circular saw. The axial drive of spindle unit of saw was limited by bearing balls placed in spindle centre holes.

Measurement of spindle lifting

Execution of the condition of the sure and safety work depends upon the overcoming by the compressed air of gravity force together with tool and tension force of pulley, and in result displacement of pivot axis in vertical plane. This magnitude is called *spindle lifting*, and accordingly to the symbols on Fig. 3 it is marked as h_l. Studying of this parameter was carried out separately for each aerostatic bearing, marking bearing on the side of saw blade with letter *A*, and from side of pulley – *B*, for supply pressure from 0.2 ÷ 0.5 MPa in steps every 0.1 MPa. Measurements were made with the use of mechanical indicator with elementary dial value $el = 0.001$ mm.

Measurement of displacement amplitudes and accelerations of circular saw vibrations

In aim to characterise vibrations were made comparative studies of values of effective vibrations of circular saw DMMA-35, after medium overhaul, with spindles supported on 6206 rolling bearings, and prototype saw with aerostatic bearings in both cases were studied complete spindles with collars and circular saw blade. In experiments was applied measuring system consisting of following elements: transducer of vibrations – piezoelectric accelerator, electronic preamplifier, frequency analyser, and frequency meter with the frequency range from 0 ÷ 10Hz. Measurements of vibrations were made on the bearing supports accordingly to the standard PN-90/N -01358, in

two directions, relating them to the position of spindle: radial and longitudinal, for frequencies from 9 ÷ 2.5 kHz, taking into account their effective values.

Measurement of noise spectrum

Studies of noise were made for the circular saw DMMA-35 as well as for circular saw prototype, and obtained results were compared.

RESULTS

Results of measurements of lifting of circular saw spindle supported on aerostatic bearings marked *A* and *B* are presented on the Fig 5. From it results, that for obtaining safe displacement of pivot $h_l \geq 9$ μm (that is $e \leq 21$ μm) it is indispensable to supply air under pressure higher than 0.4 MPa. The difference of lifting value between bearing

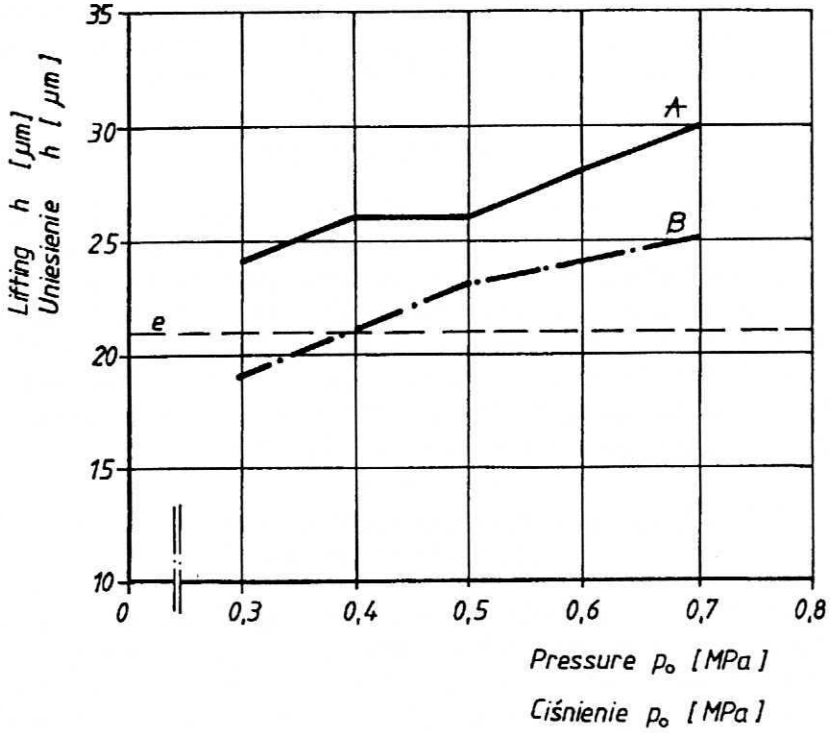

Fig. 5. Diagram of lifting of saw machine spindle in feeding pressure function:
A – bearing on the saw blade side, *B* – bearing on the pulley side
Rys. 5. Wykres uniesienia wrzeciona pilarki w funkcji ciśnienia zasilania:
A – łożysko od strony piły, *B* – łożysko od strony przekładni pasowej

A and *B* is the result of interaction of tension of the v-belts of pulley between motor and spindle.

In Table 1 and on Fig. 6 and 7 are presented results of measurements of the effective resultant amplitudes of displacements and accelerations of mechanical vibrations of spindle of the circular saw with roller bearings.

Table 1

Tabela 1

Mean values of the effective resultant displacements of amplitudes and acceleration of mechanical vibrations of the circular saw spindle with rolling bearing

Średnie wartości skutecznych wypadkowych amplitud przemieszczeń i przyspieszeń drgań mechanicznych wrzeciona pilarki tarczowej łożyskowanego tocznie

Number Lp.	Frequency Częstotliwość [Hz]	Displacement Przemieszczenie [μm]			Acceleration Przyspieszenie [cm·s^{-2}]		
		Radial Promieniowe	Axial Osiowe	Resultant Wypadkowe	Radial Promieniowe	Axial Osiowe	Resultant Wypadkowe
1	9	0.7	0.4	0.8	0	0	0
2	22	43.2	39.0	58.2	102	74	127
3	50	26.0	23.5	35.0	310	228	417
4	100	0	0	0	0	0	0
5	125	1.1	0.4	1.2	128	31	132
6	500	0	0	0	149	175	230
7	700	0.1	0.2	0.2	1039	1608	1916
8	1000	0	0	0	857	867	1220
9	2000	0	0	0	665	1059	1250
10	2500	0	0	0	235	357	428

Obtained results of medium values of vibrations are presented on the diagram on the pattern of curve from the scale of human feelings. This curve is showing limit values of vibrations determined by the definition *noxious vibrations.* The limit of noxious vibrations value is marked on figures by one point line. The spindle of circular saw, supported by ball bearing, is generating pik amplitudes of vibrations for frequencies 22 and 50 Hz, and is reaching maximum value 58 μm (Fig 6). While the greatest acceleration of spindle vibrations occurs at frequency: 22, 50, 125, and 700 Hz, at maximum value equal 1916 cm·s^{-2} (Fig. 7). Measurements of the same parameters of mechanical vibrations were caried out for the aerostatically beared spindle. The obtained results are tabulated in Table 2 and illustrated on Fig. 8 and 9.

For the measurement frequencies from 1000 up to 2500 Hz were stated zero values of effective amplitudes of displacements and accelerations on supports. Comparison of values of measurement results listed in Tables 1 and 2, and illustrated on Fig. – poperly 6 and 8 and 7 and 9 is showing, that for all frequencies were obtained lowering of resultant values of effective displacements and accelerations.

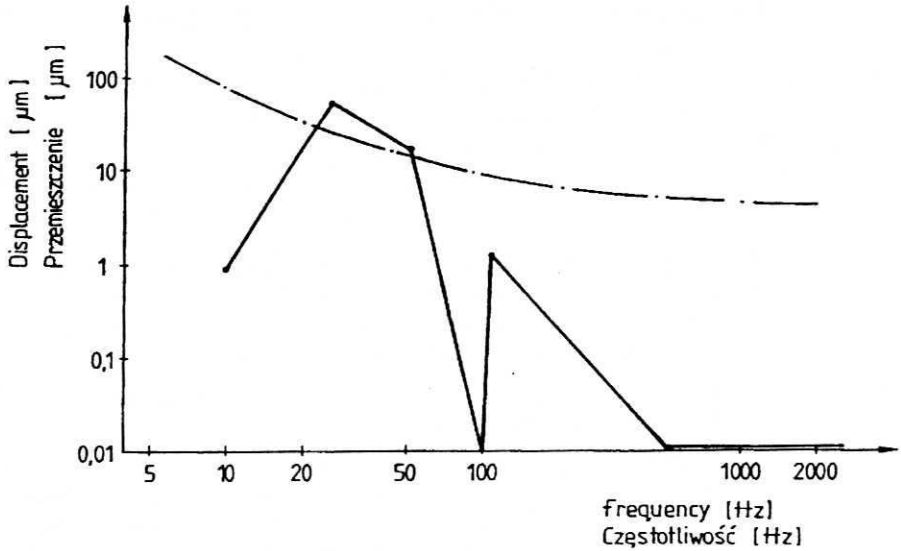

Fig. 6. Diagram of the effective resultant displacements of amplitudes of vibrations of DMMA-35 saw with a spindle supported on the rolling bearing

Rys. 6. Wykres skutecznych wypadkowych amplitud przemieszczeń drgań pilarki DMMA-35 z wrzecionem łożyskowanym tocznie

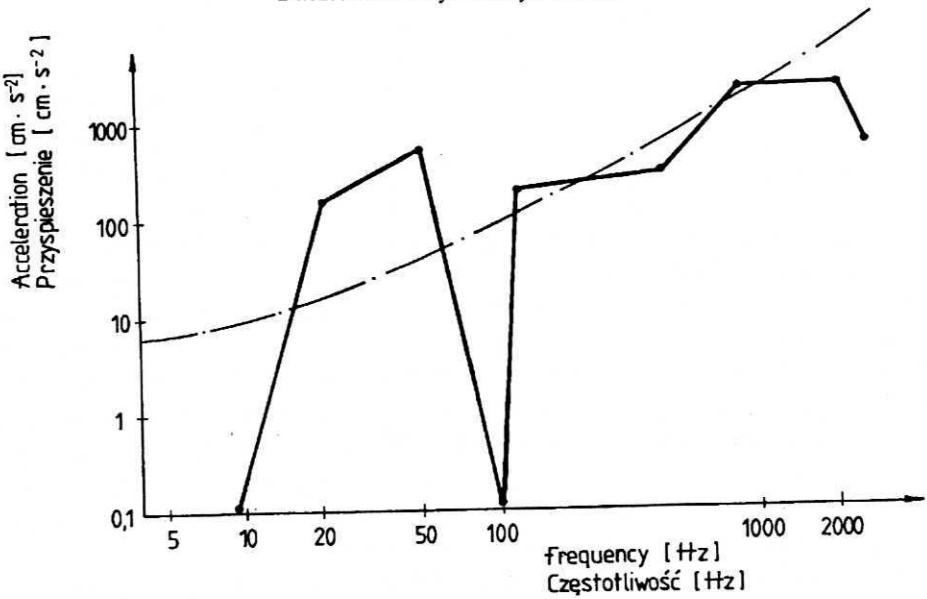

Fig. 7. Diagram of the effective resultant accelerations of amplitudes of vibrations of DMMA-35 saw with a spindle supported on the rolling bearing

Rys. 7. Wykres skutecznych wypadkowych amplitud przyspieszeń drgań pilarki DMMA-35 z wrzecionem łożyskowanym tocznie

Table 2

Tabela 2

Mean values of the effective resultant displacements of amplitudes and acceleration of mechanical vibrations of the aerostatically beared circular saw spindle

Średnie wartości skutecznych wypadkowych amplitud przemieszczeń i przyspieszeń drgań mechanicznych wrzeciona pilarki tarczowej łożyskowanego aerostatycznie

Number Lp.	Frequency Częstotliwość [Hz]	Displacement Przemieszczenie [μm]			Acceleration Przyspieszenie [cm·s^{-2}]		
		Radial Promieniowe	Axial Osiowe	Resultant Wypadkowe	Radial Promieniowe	Axial Osiowe	Resultant Wypadkowe
1	9	0.5	0.2	0.5	0	0	0
2	22	17	22	27.1	63	39	74
3	50	12	13	17.7	40	32	51
4	100	0	0	0	0	0	0
5	125	0.8	0.2	0.8	58	39	70
6	500	0	0	0	46	25	52
7	700	0	0	0	20	39	44

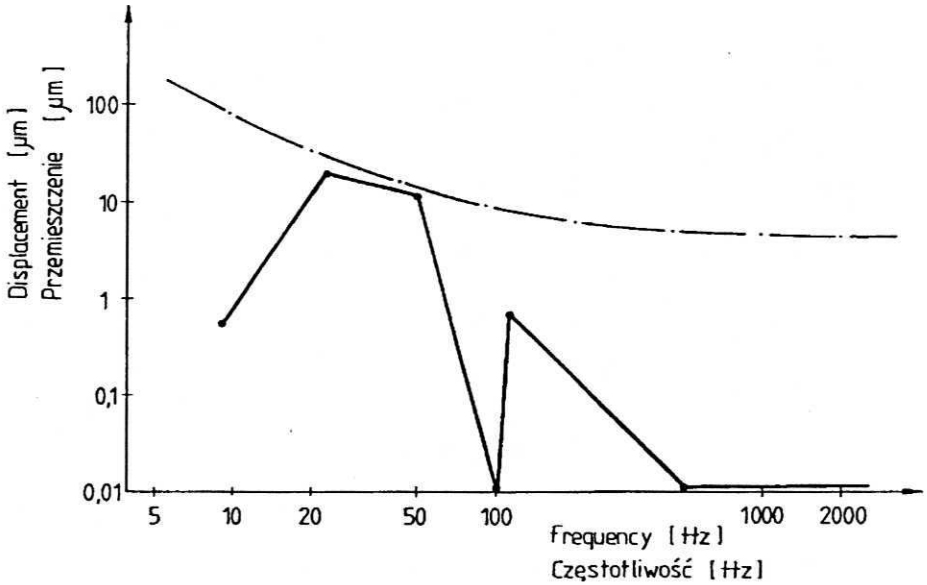

Fig. 8. Diagram of the effective resultant displacements of amplitudes of vibrations of the prototype saw with a spindle supported on the aerostatic bearing

Rys. 8. Wykres skutecznych wypadkowych amplitud przemieszczeń drgań pilarki prototypowej z wrzecionem łożyskowanym aerostatycznie

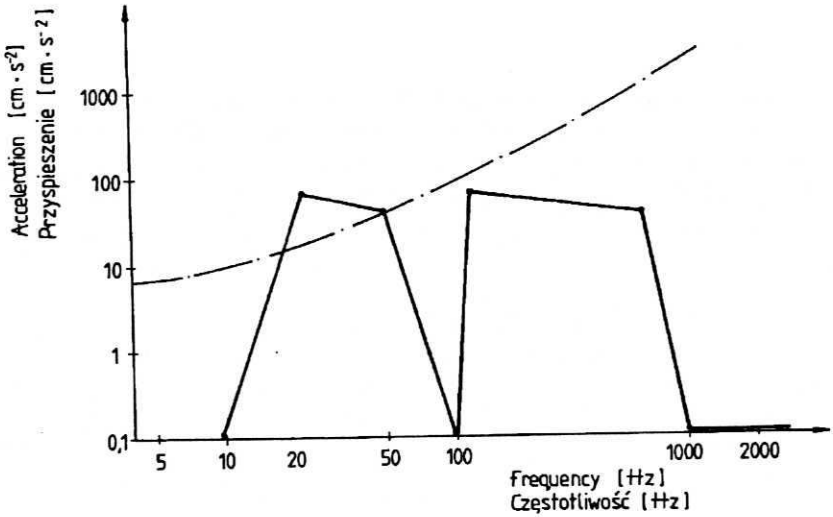

Fig. 9. Diagram of the effective resultant accelerations of amplitudes of vibrations of the prototype saw with a spindle supported on the aerostatic bearing

Rys. 9. Wykres skutecznych wypadkowych amplitud przyspieszeń drgań pilarki prototypowej z wrzecionem łożyskowanym aerostatycznie

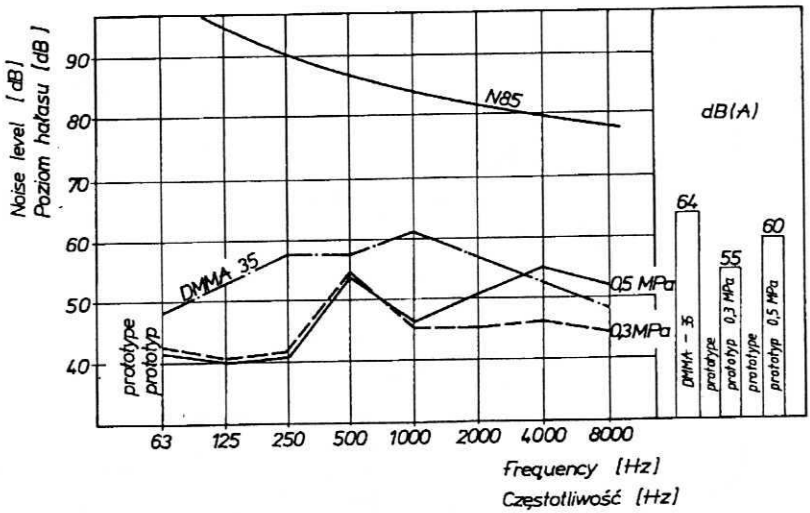

Fig. 10. Spectrum analysis of noise of circular saw machines:
——— spindle supported on rolling bearing
--------- spindle supported on aerostatic bearing

Rys. 10. Analiza widmowa hałasu pilarek tarczowych:
——— wrzeciono łożyskowane tocznie
--------- wrzeciono łożyskowane aerostatycznie

On the Fig. 10 are presented results of measurements of the level of sound intensity of DMMA – 35 and laboratory saw, at supplying of their bearings with air under pressure of 0.3 and 0.5 MPa. Comparison of values placed on diagram is showing, that for aerostatic bearing were obtained lowering of noise level from 4 to 9 dB(A).

RECAPITULATION

Preliminary investigations of the prototype of circular saw with spindle aerostaticaly beared, have shown possibility of replacement of rolling bearings with air bearings. Obtained in experiments transverse bearing capacities equal 150 N, at predesigned diameter clearance 60 μm, at pressure of compressed air above 0.4 MPa allows to obtain lifting of the pivot of saw with diameter 36 h6 about 9 μm, what enables to carry out wood sawing process.

The work of the spindle of the circular saw on the air cushion is minimising propagation of vibrations from the system of spindle of saw on the body of machine tool. In result of that exists possibility of lowering of the level of sound intensity from 4 to 9 dB(A).

It seems reasonable to continue the studies of aerostatic bearings in respect to upper spindle mills, fast turning, characterised by high emission of noise, and vibrations of rolling bearings.

Received in November 1998

REFERENCES

Cempel C. (1985): Diagnostyka wibroakustyczna maszyn. Wyd. Politechniki Poznańskiej.
Kwapisz L. (1991): Szybkoobrotowe elektrowrzeciona na łożyskach aerostatycznych. Mechanik LXIV (5-6): 209 – 212.
Kwapisz L., Rafałowicz J. (1976): Szlifierki. WNT Warszawa.
Wrotny L. (1973): Podstawy konstrukcji obrabiarek. WNT Warszawa.
PN- 90/N- 01358: Drgania. Metody pomiarów i oceny drgań maszyn.

PRÓBA ŁOŻYSKOWANIA AEROSTATYCZNEGO WRZECIONA PILARKI TARCZOWEJ DO DREWNA

Streszczenie

Podjęto próbę wykazania możliwości zastąpienia łożysk tocznych przy wrzecionie pilarki tarczowej do drewna łożyskami powietrznymi. Na podstawie przyjętych założeń technicznych, które dotyczyły obciążenia wrzeciona, luzu średnicowego czopa względem panwi oraz ciśnienia powietrza zasilającego łożyska, zrealizowano prototyp pilarki tarczowej. Wykonano badania skutecznych wypadkowych amplitud przemieszczeń i przyspieszeń drgań oraz widma hałasu pilarki z wrzecionem łożyskowanym tocznie i łożyskowanym aerostatycznie, a uzyskane wyniki porównano ze sobą. Z analizy porównań wynika, że dla wszystkich badanych częstotliwości uzyskano obniżenie wartości amplitud przemieszczeń i przyspieszeń drgań oraz obniżenie poziomu natężenia dźwięku dla wrzeciona z łożyskami aerostatycznymi.

Authors' address:
Dr inż. Stanisław Kruś
Dr inż. Bolesław Kortylewski
Akademia Rolnicza im. A. Cieszkowskiego
w Poznaniu
Katedra Obrabiarek i Urządzeń Przemysłowych
60-627 Poznań, ul. Wojska Polskiego 38/42
POLAND