FOLIA FORESTALIA POLONICA
seria B, zeszyt 30, 1999

STUDIES ON STRENGTH AND ELASTICITY OF GLUE LINES FROM PVAC ADHESIVES APPLIED FOR PRODUCTION OF SKELETON FURNITURE

by Stanisław Proszyk[1], Jerzy Smardzewski[2] and Tomasz Krystofiak[1]

[1] Department of Gluing and Finishing of Wood, [2] Department of Furniture
A. Cieszkowski Agricultural University of Poznan

Studied were shearing strength and elasticity of glue lines from oak wood glued with the use of assembly PVAC adhesives. Shearing strength of glue lines was made with the use of tension method accordingly to the PN-EN 205 standard and by compression loading accordingly to the PN–B–03156. The elasticity of glue lines in angle joints was determined through static and dynamic loads bending forces, acting on the arm with the length 350 mm. Dynamic loads were exerted in the cyclic way at values being properly 20, 40, and 60% of destructive loads. All measurements were conducted with the use of testing machine ZWICK 1445 with proper equipment.

Key words: oak timber, PVAC adhesive, glue line, shearing strength, static loading, dynamic loading, elasticity

INTRODUCTION

The majority of skeleton furniture is characterised by angle joints obtained by gluing of fork, mortise-tenon, or dowel joints, which are made usually in conditions of domestic furniture industry from oak or beech timber (Dzięgielewski 1991, Korzeniowski and Szulc 1992, Warmbier and Wilczyński 1997). Such systems are loaded with static loads in form of usable loads exerted on seats, rests or frames in course of their use. In the process of designing of armchairs, chairs etc. structures it is to foresee possibility of dynamic loading of furniture simulating thus cases of improper uses of product (Smardzewski and Dzięgielewski 1997). External loads put to the elements of furniture structure are causing in them proper internal forces. Due to the location of structural nodes in side frames of said structures, they are under intense loads causing

shearing of glue lines. The most unfavourable effect on the strength of joints in skeleton structures of furniture have the bending moments (Korzeniowski 1989, Rózalski and Tomusiak 1989, Kędzierski and Swaczyna 1990, Smardzewski 1995). For the glue lines in dowel joints they are not essential danger for strength, because the dominant part of this load are taking the dowels which are undergoing bending. In this case the glue line is under shearing, and on its strength decides only the length of dowels (Warmbier and Wilczyński 1997, Wilczyński 1998a, b).

Decidedly the most endangered on the initiation of cohesion processes in glue lines are shaped joints, and among them mortise-tenon, and fork joints. When bent, they are causing simultaneous shearing and torsion of glue line forming in them states of tangential stresses. In opposition to the samples accordingly to PN-EN 205, where glue line is undergoing shearing in the tension test, the maximum value of tangential stresses in such glue line is lower than value of maximum stresses in rectangular glue lines of angle joints exposed for bending (Smardzewski 1996, 1998, Mitisor et al. 1997).

For the most deep knowledge of glue lines properties from mounting PVAC adhesives it was decided to carry out experimental works, whose aim was evaluation of quality of selected PVAC adhesives through determination of the shearing strength of glue lines with the use of standard methods, and elasticity characteristics for angle joints exposed on static and dynamic loads. To this work was devoted also methodological aspect, tending towards proposal possibly simple method as the research tool allowing to evaluate elastic properties of glue lines in angle joints.

EXPERIMENTAL

For studies were taken 2 assembly PVAC adhesives, products of JOWAT and FULLER firms with trade names:

- Jowacoll® 104 20 (JOWAT Klebstoffe Lobers u. Frank GmbH & Co KG Detmold)
- Rakoll® Express 25 (H.B. FULLER GmbH Bereich Rakoll – Holzklebstoffe Nienburg Weser).

Properties of the used for tests adhesives on the base of the enclosed certificates are presented in the Table 1.

For the gluing was used oak timber, which in form of elements with close grains structure were prepared in technical conditions of the firm MEBLE KLER with abode in Dobrodzień.

The wood density with moisture content 7±1% was in the range 0.56–0.74 g/cm^3, at the average value 0.67 g/cm^3.

Table 1

Tabela 1

Properties of PVAC adhesives used in experiments
Właściwości klejów PVAC użytych do badań

Properties Właściwości	Kind of adhesive Rodzaj kleju	
	Jowacoll®	Rakoll®
Density, g/cm^3 Gęstość, g/cm^3	1.07 ± 0.02	–
Apparent viscosity, mPa·s Lepkość pozorna, mPa·s – Contraves TVB rheoviskometer (MS – r4) – reowiskozymetr Contravesa TVB (MS – r4)	–	7 500
– Brookfield HBT rheoviskometer (3.20 min^{-1}) – reowiskozymetr Brookfielda HBT (3,20 obr/min)	10 500 ± 2 500	16 000
Content of dry mass, % Zawartość suchej masy, %	45 ± 2	–
pH	4.5 ± 0.5	7
MFT, °C MTB, °C	+ 9	+3

For the tested adhesives were adopted given below parameters of gluing:

- temperature 23±1°C
- RH of the air 65±5%
- quantity of unilateral spread glue 150g/m^2
- open assembly time 8±1 min
- pressing pressure 0.5 MPa
- pressing time 30 min.

The shearing strength of glue lines with the use of tension method was determined, using samples accordingly to the PN-EN 205 standard. Testing of strength and water durability of glue lines was made accordingly to the tests procedure in durability class D 2 accordingly to PN-EN 204.

The shearing strength of glue lines by compression loading was determined accordingly to the requirements of PN–B–03156 standard.

In aim to carry out the strength experiments of glue lines in angle joints under static and dynamic loading, the oak slats with dimension 400 x 50 x 10 mm and grains presented on the Fig. 1a were glued at assumed parameters into flat angle joints with shape and dimensions as on Fig. 1b.

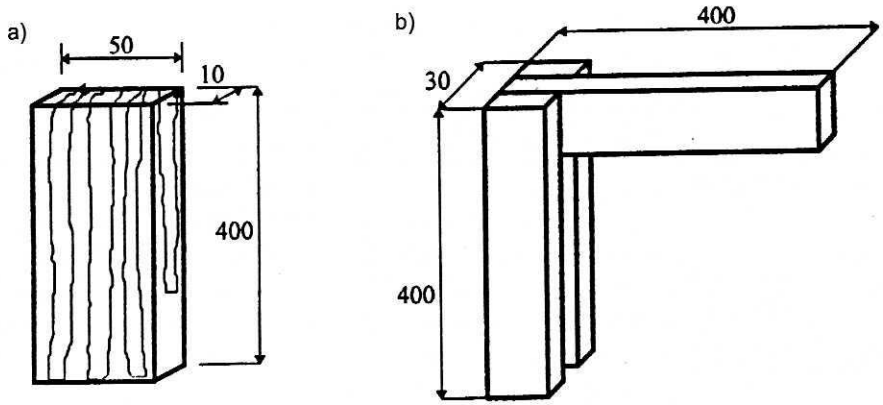

Fig. 1. Shape and dimensions of flat angle joints used for experiments
a) slat with marked grains, b) angle joint
Rys. 1. Kształt i wymiary połączeń kątowych użytych do badań
a) listwa z zaznaczonym usłojeniem, b) połączenie kątowe

It was adopted the loading of samples through applying static or dynamic bending forces, acting on the arm with length 350 mm (Fig. 2).

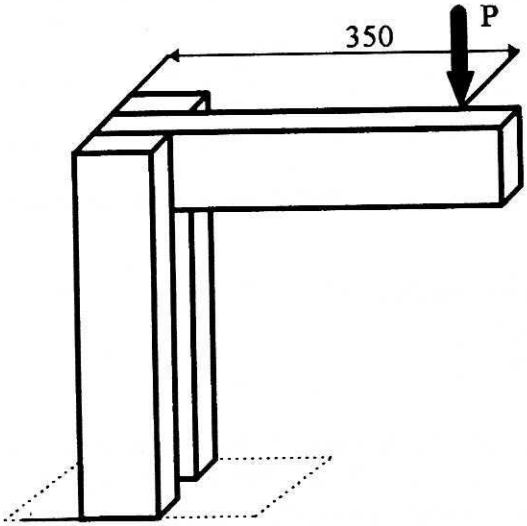

Fig. 2. Diagram of loading of angle joints
Rys. 2. Schemat obciążania połączeń klejowych

In evaluation of the quality of the bonding of glue lines in angle joints were determined: static, and dynamic strength and rigidity.

For the dynamic experiments were used identical as before, samples with this only difference, that the dynamic loading were exerted in the cyclic way. Their value was properly 20, 40, 60%, and additionally 90% of joints destroying forces.

Experiments of strength and durability of glue lines were carried out with the use of numerically controlled testing machine ZWICK 1445 with proper equipment for fixing samples.

RESULTS

Results of experiments and tests on strength of the glue lines made of Jowacoll® 104 20 and Rakoll® Express 25 adhesives with the use of tension and compression loading with their elementary statistic evaluation are presented in Table 2. It is worth to stress, that at destructive stresses the tested glue lines were destroyed in layers of wood situated near glue line, what certifies that the real strength of glue lines were higher than recorded values.

Table 2

Tabela 2

Results of shearing strength of glue lines determined by tension and compression methods for Jowacoll® 104 20 and Rakoll® Express 25 adhesives

Wyniki badań wytrzymałości spoin na ścinanie metodą rozciągania oraz ściskania z klejów Jowacoll® 104 20 i Rakoll® Express 25

Statistical data[x)] Dane statystyczne [x)]	Kind of adhesive Rodzaj kleju					
	Jowacoll®		Rakoll®		Jowacoll®	Rakoll®
	Strength, MPa Wytrzymałość, MPa					
	Tension method Metoda rozciągania				Compression method Metoda ściskania	
	Tests in D 2 class acc. to PN-EN 204 Testy w klasie D 2 wg PN-EN 204					
	Nr 1	Nr 2	Nr 1	Nr 2		
x , MPa	9.7	9.5	9.6	8.8	15.9	14.5
x_{max}, MPa	16.8	12.6	11.1	13.1	20.9	17.9
x_{min}, MPa	6.1	4.3	5.8	3.0	10.1	10.2
$\pm\delta_{n-1}$, MPa	2.5	2.1	1.3	2.2	2.7	2.1
$\pm m_{\delta n-1}$, MPa	0.7	0.6	0.4	0.7	0.8	0.6
p, %	7.4	6.3	4.0	7.4	4.9	4.3
v, %	25.8	21.9	13.8	25.7	16.9	14.7

x)

x - arithmetic mean - średnia arytmetyczna

x_{max} - maximum value - wartość maksymalna,

x_{min} - minimum value - wartość minimalna

δ_{n-1} - standard deviation - odchylenie standardowe

$m_{\delta n-1}$ - error of standard deviation - błąd odchylenia standardowego

p - index of precision level - współczynnik poziomu dokładności

v - coefficient of variation - współczynnik zmienności

Considerable distribution of obtained values can be explained by the differentiation of the density of used for experiments oak wood. General evaluation of the results of glue lines for shearing strength and their water durability univocally is showing, that evaluated adhesives are representing fully comparable properties in this respect.

In the Table 3 are given mean values of forces which are destroying tested angle joints, at static loading. From the data contained in this Table results, that the strength of joints bonded with the Jowacoll® 104 20 adhesive only 6.2% is overreaching the strength of joints bonded with Rakoll® Express 25 adhesive. When estimated statistically obtained results, and with not taking into account appearance of broken joints, recorded differences in values are showing into statistically significant effect of the kind of applied adhesives on the strength of joints on the confidence level $1-\alpha=0.95$. However having in mind auxiliary important criterion in the range of quality of bonding, namely the appearance of glue line in broken samples in course of strength test, which analogously occured only in wood, obtained values could be treated as comparable. It is known, that the destruction of joint in wood takes place when, cohesion forces between molecules of adhesive and its adhesion forces to the wood are prevailing the cohesion forces between particles of wood. The appearance of broken glue joint is without doubt bound with the laminated structure of glue line, and the weakest element is deciding on its strength. In conclusion the strength of joints at static loading is for both tested adhesives very high and comparable.

Table 3

Tabela 3

Results of destroyed forces for angle joints
from Jowacoll® 104 20 and Rakoll® Express 25 adhesives at static loading
Wyniki badań statycznych sił niszczących połączenia katowe
z klejów Jowacoll® 104 20 i Rakoll® Express 25

Kind of adhesive Rodzaj kleju	Statistical data x) Dane statystyczne x)		
	x, N	Δ_{n-1}, N	v, %
Jowacoll®	987.71	258.47	26.17
Rakoll®	929.68	151.38	16.28

x) marking as in Table 2, x) oznakowanie jak w tabeli 2

The results of experiments of the dynamic strength joints at various values of loading are presented in Table 4.

Table 4

Tabela 4

Results of dynamic loading for angle joints
from Jowacoll® 104 20 and Rakoll® Express 25 adhesives
Wyniki badan obciążeń dynamicznych połączeń kątowych
z klejów Jowacoll® 104 20 i Rakoll® Express 25

Loading value, % Wartość obciążenia, %	Kind of adhesive Rodzaj kleju			
	Jowacoll®		Rakoll®	
	Force, N Siła, N	Number of cycles Liczba cykli	Force, N Siła, N	Number of cycles Liczba cykli
100	987.71	–	929.68	–
20	197.54	30000 (without break of joints) (brak zniszczenia połączeń)	185.94	30000 (without break of joints) (brak zniszczenia połączeń)
40	395.08		371.87	
60	592.63		557.81	

In result of carried out strength tests after obtaining 30 000 cycles, the tests were ended on each of the loading levels due to the lack of visible breaking of joints. There is to be mentioned, that in this way both tested glues have shown perfect properties, distinctly overreaching allowable requirements established for frame structures on the level of 10 000 cycles of dynamic stresses. When carrying additional tests for 90% of breaking loading the tests were stopped after obtaining in the criterional number of 10 000 cycles for bonded joints with the use of both adhesives, without noticing any failures.

Due to the character of falling into layers of glue lines at destructive stresses were not made analytical calculations of their distribution in tested systems.

In many cases upon the quality of structure decides rigidity of joints expressed by value of force in strains function $P = f(l)$. On the Fig. 3 are presented example courses of formation of rigidity of joints, which was presented by relation of displacements on stresses.

For the comparison of rigidity of those systems was made Fig. 4, on which is presented average rigidity of glue lines in tested angle joints. From this figure and Table 5 results, that rigidity of tested joints does not depend on the kind of used adhesives,and that found difference, being 0.58 N/mm, is statistically unsignificant on the confidence level $1 - \alpha = 0.95$.

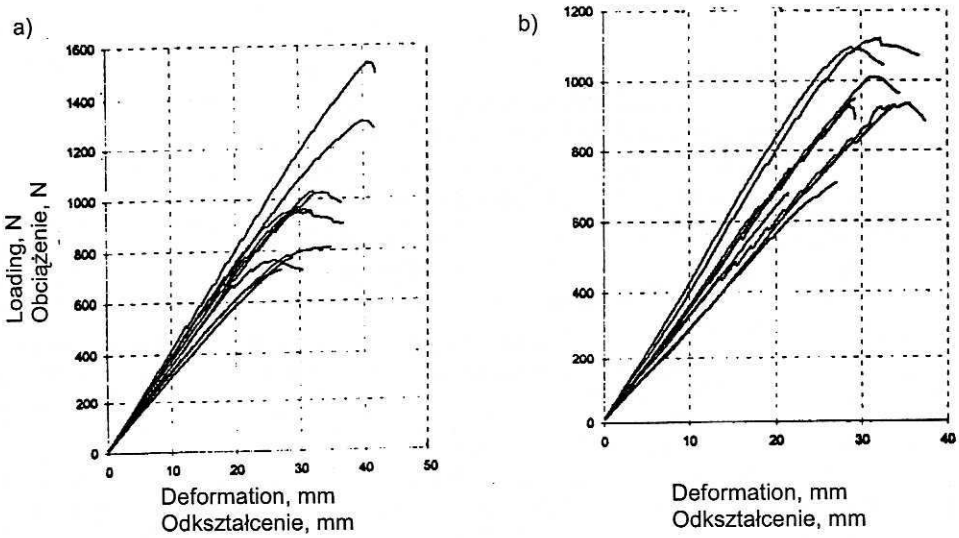

Fig. 3. Rigidity of angle joints bonded with adhesives:
a) Jowacoll® 104 20
b) Rakoll® Express 25
Rys. 3. Sztywność połączeń kątowych sklejonych klejami:
a) Jowacoll® 104 20
b) Rakoll® Express 25

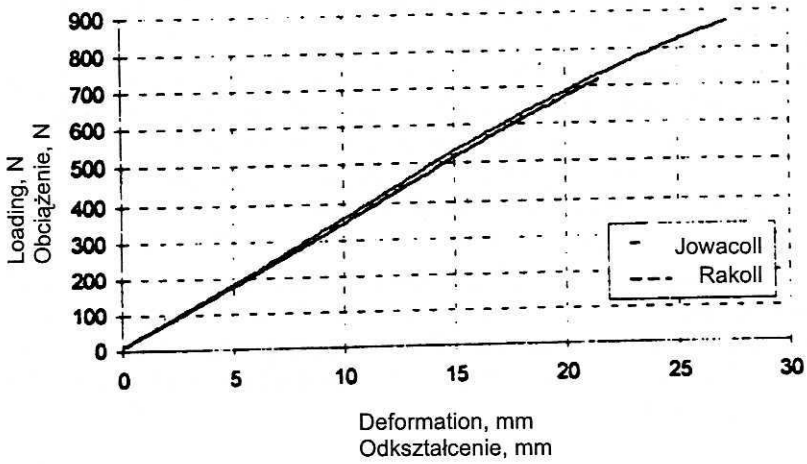

Fig. 4. Mean rigidity of angle joints from Jowacoll® 104 20 and Rakoll® Express 25 adhesives
Rys. 4. Średnia sztywność połączeń klejowych z klejów Jowacoll® 104 20 i Rakoll® Express 25

CONCLUSIONS

1. Glue lines from tested PVAC adhesives with trade names Jowacoll® 104 20 and Rakoll® Express 25 are characterised by comparable and very high quality fully predisposing them for furniture production with frame structures.
2. Shearing strength of glue lines at tension overreached value 9.5 MPa, fulfilling thus requirements of durability class D 2 accordingly to the standard PN-EN 204, while shearing strength by compression loading was above 14.5 MPa.
3. Angle joints statically stressed with bending forces, acting on the arm of the length 350 mm were carrying breaking stresses overreaching level of value 900 N.
4. Glue lines in angle joints were characterised by very great elasticity at cyclic dynamic stresses. At values of stresses, being properly 20,40, 60 and 90% in respect to the breaking loads tested joints have shown durability overreaching 30 000 of cyclic stresses.
5. The angle joints from tested adhesives were characterised by high rigidity, on the level of 34 N/mm.

Received in June 1999

REFERENCES

Dzięgielewski S. (1991): Sposoby nanoszenia kleju na powierzchnie złączy a jakość połączeń. Przemysł Drzewny 42 (7): 10-13.

Kędzierski A., Swaczyna I. (1990): Badanie sztywności i nośności połączeń meblarskich – analiza i propozycje metodyczne. Przemysł Drzewny 41 (1): 6-9.

Korzeniowski A. M. (1989): Metody badania wytrzymałości konstrukcji meblarskich – stan obecny i prognoza rozwoju. Przemysł Drzewny 40 (6): 5-8.

Korzeniowski A. M., Szulc P. (1992): Doświadczalna weryfikacja oczekiwanej nośności połączeń kołkowych. Przemysł Drzewny 43 (9): 3-5.

Mitisor A., Lazarescu C., Barbu M. C., Lica D., Crisan R. (1997): Fatique strength of wooden joints. Zbornik referátov. Les – Drevo – životne Prostredie '97. Sekcia č. 5. Štruktura a vlastnosti dreva v technologickom využiti. Zvolen: 229-236.

Różalski M., Tomusiak A. (1989): Badania sztywności i nośności elementów i podzespołów meblarskich – analiza i propozycje metodyczne. Przemysł Drzewny 40 (7): 17-20.

Smardzewski J. (1995): Rozkład naprężeń stycznych w prostokątnych spoinach połączeń kątowych. Mat. sesji naukowej nt. „Badania dla meblarstwa". Wyd. AR Poznań: 45-55.

Smardzewski J. (1996): Distribution of stresses in finger joints. Wood Sci. Technol. 6: 477-489.

Smardzewski J., Dzięgielewski S. (1997): Badanie wytrzymałości zmęczeniowej wybranych połączeń meblowych. 11 Konferencja Naukowa WTD SGGW nt. Drewno – materiał ekologiczny. 18-19 listopada, Warszawa: 143-150.

Smardzewski J. (1998): Wpływ niejednorodności drewna i spoiny klejowej na rozkład naprężeń stycznych w połączeniach meblowych. Roczniki AR w Poznaniu. Rozprawy Naukowe z. 282.

Warmbier K., Wilczyński A. (1997): Nośność osiowa złącza kołkowego wykonanego z drewna bukowego. Mat. XI Konferencji Naukowej Wydz. Technol. Drewna SGGW – Drewno materiał ekologiczny. Warszawa: 151-157.

Wilczyński A. (1998a): Wpływ głębokości osadzenia kołka w połączeniach drewnianych na nośność osiową. Przemysł Drzewny 49 (2): 22-25.

Wilczyński A. (1998b): Dowel joint ultimate load capacity the effect of joint dimensions and of the direction of dowel embedment in wood. Zbornik referátov z vedeckej konferencie: Čalúnické dni – kvalita v čalúnictvie. Zvolen: 84-89.

PN-B-03156: Konstrukcje drewniane. Metody badań. Nośność złączy klejonych, lipiec 1997.

PN-EN 204: Klasyfikacja klejów do łączenia drewna i materiałów drewnopochodnych w nienośnych elementach konstrukcyjnych, grudzień 1994.

PN-EN 205: Metody badań klejów do drewna przeznaczonych do zastosowań niekonstrukcyjnych. Określanie wytrzymałości spoiny klejowej na ścinanie w połączeniach zakładkowych, grudzień 1994.

BADANIA WYTRZYMAŁOŚCI I SPRĘŻYSTOŚCI SPOIN Z KLEJÓW PVAC STOSOWANYCH DO PRODUKCJI MEBLI SZKIELETOWYCH

Streszczenie

Badano wytrzymałośćc na ścinanie i sprężystość spoin z drewna dębowego sklejonego montażowymi klejami PVAC. Sprężystość spoin w połączeniach kątowych określono poprzez obciążanie statycznymi i dynamicznymi siłami zginającymi, działającymi na ramieniu o długości 350 mm.

Na podstawie wyników przeprowadzonych badań stwierdzono m.in., że spoiny w połączeniach kątowych charakteryzowały się bardzo dużą sprężystością przy cyklicznych obciążeniach dynamicznych. Przy wartościach obciążen, wynoszących odpowiednio 20, 40 i 60% w stosunku do obciążeń niszczących badane połączenia wykazały odporność przekraczającą 30 000 cykli obciążeń.

Połączenia kątowe z testowanych klejów charakteryzowały się wysoką sztywnością, kształtującą się na poziomie 34 N/mm.

Authors' address:
Prof. dr hab. Stanisław Proszyk
Mgr inż. Tomasz Krystofiak
Katedra Klejenia i Uszlachetniania Drewna
Dr hab. inż. Jerzy Smardzewski
Katedra Meblarstwa
Akademia Rolnicza im. A. Cieszkowskiego w Poznaniu
60-627 Poznań, ul. Wojska Polskiego 38/42
POLAND