FOLIA FORESTALIA POLONICA
Seria B, zeszyt 28, 1997

RELATIONSHIP BETWEEN FRACTURE ENERGY AND ACOUSTIC EMISSION ACTIVITY IN SPLITTING TEST OF WOOD*

by Jan Raczkowski and Waldemar Moliński
Department of Wood Science
A. Cieszkowski Agricultural University of Poznań

Studies were carried out to better recognize dependence between wood structure and its fracture energy, and acoustic emission activity induced at frictionless splitting test. The experriments were made on pine (*Pinus sylvestris* L.), oak (*Quercus petraea* Liebl.) and beech (*Fagus sylvatica* L.) splitted in tangential (TL) and radial (RL) planes. The splitting test was carried out according to the method worked out by Elmar Tschegg of Technical University of Vienna and Stefanie Stanzl-Tschegg of University of Agriculture in Vienna.

Key words: pine, oak, beech wood, frictionles splitting, crack propagation, fracture energy, acoustic emission

INTRODUCTION

Recently promising studies have been taken up on fracture energy required for total splitting of a material sample, according to a new method for, so called, frictionless splitting. This method was at first worked out for concrete (Tschegg 1991) and then adapted for tests on wood (Stanzl-Tschegg et al. 1994, Stanzl-Tschegg et al. 1995). It consists in splitting specifically shaped sample with a slim wedge. The novelty and originality of the method results from the fact that the wedge is not pushed directly into the studied material, but the forces exerted by it are transferred into the sample through a system of ball or needle bearings. Hence friction forces in the acting forces system are reduced to negligibly small values (Bažant 1992, Stanzl-Tschegg et al. 1995). Thus determined fracture energy is an useful parameter describing behaviour of wood at splitting. It includes both the energy needed to initiate cracks and that required for crack propagation to full splitting of wood.

The studies on fracture energy with frictionless splitting method have only started and so far have concerned mostly methodological trials on spruce wood (Stanzl-Tschegg et al. 1994, Stanzl-Tschegg et al. 1995, Tan et al. 1995) and some composite wood products (Ehard et al. 1995). It seems justified and purposeful to continue these studies. Moreover, this splitting test of wood is particularly appropriate for simultaneous studies on acoustic energy activity (AE) generated at initiation and propagation of cracks in wood. Acoustic

---

* Paper presented at the Intern. Sci. Conference Forest-Wood-Environment97, Zvolen (Slovakia), September 8-11, 1997

emission is a known, additional and valuable source of information on wood cracking process (Raczkowski et al. 1992,1994).

Therefore studies were undertaken to better recognise relationship between fracture energy and activity of acoustic emission in the frictionless wood splitting test. The basic aim of the work was determination of the effect of wood species and crack plane on fracture energy and acoustic emission generated in the process.

METHODS

EXPERIMENTAL MATERIAL

Experiments were carried out on wood of species with clearly differentiated anatomical structure to observe the effect of wood structure on fracture energy and acoustic emission activity. Splitting was carried out in two cracking plane orientation: tangential plane (TL) and radial plane (RL) (load direction T or R, crack propagation direction L, fracture area

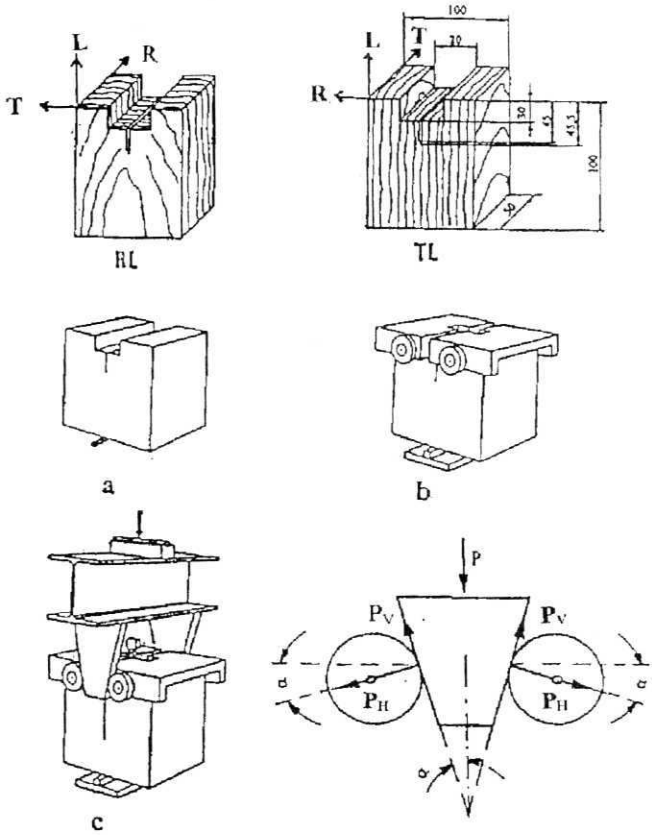

Fig. 1. Shape and dimensions of the samples and a scheme of „frictionless" splitting test of wood with wedges splitting test (after Bažant 1992)

Rys. 1. Kształt i wymiary próbek oraz przebieg „beztarciowej" próby łupliwości drewna przy użyciu klinów (wg. Bažanta 1992)

TL or RL). Tests were on pine (*Pinus sylvestris* L.), oak (*Quercus petraea* Liebl.) and beech (*Fagus sylvatica* L.) wood as clear representatives of coniferous and ring-porous and diffuse - porous deciduous species. The samples were made of wood seasoned for many years under roof.

The samples had the shape and dimensions like of those used earlier in the experiments on splitting energy of spruce wood (Stanzl-Tschegg et al. 1994). The shape and dimensions of the samples and orientation of crack planes are given in fig. 1. Directioning cuts and a 15 mm notches were made with a side milling cuter. To obtain sharp and repeatable starting notches, additional, 0.5 mm deep cuts were made with a thin blade knife pressed in testing machine. Splitting test was carried out on the samples with moisture content close to 12% (10-12%).

EXPERIMENTS

To determine fracture energy of wood, the splitting test worked out for concrete (Tschegg 1991) and adapted for wood (Stanzl-Tschegg et al. 1994, 1995) was used. The scheme of the experiment is given in fig. 1. On rectangular sample with a grooves and a starting notches directing crack plane (a) was mounted a load transfer system adjusted to the grooves (b). The load exerted by the testing machine on slim wedges is transmitted onto the sample indirectly through load transfer system supported against opposite sides of the grooves in the sample (c). To reduce friction between the wedges and the load transfer system to negligible values, needle bearings were used. In this case friction forces do not exceed 1% of the acting force (Tschegg 1991).

Appropriate equipment was designed and built for the experiments. The wood sample and the equipment were placed in testing machine FPZ 100 (TIRA Maschinenbau GmbH Rauenstain) on the surface of a narrow line support parallel to the grooves surface in the sample (fig. 1a). The load from the rigid machine shaft is transmitted on two wedges ($\alpha = 15^0$) placed in frontal and rear sample planes. The wedges are uniformly pushed between two needle bearings. The main proportion of the force exerted by the testing machine (P_M) acts as a horizontal stretching force (P_H) while the vertical component (P_V) is negligibly small (fig. 1d). The force acting on the wedges was graphically registered in the force - time system with the testing machine register. The load was applied at the rate of 0.1 mm/min. Each trial lasted for about 40 minutes. Crack opening displacement (COD) was measured along the line of stretching force action (P_H) with inductive displacement sensor connected to Eimetr 1 meter. Each series of experiments was repeated on five samples*.

Total fracture energy was determined as a surface under the curve horizontal force (P_H) - width of crack opening (δ) registered at stable propagation of the crack. Specific total fracture energy (G_f) was determined as a quotient of total fracture energy and nominal fracture area of sample (A):

$$G_f = \frac{1}{A} \int_0^{\delta_{max}} P_H(\delta)\, d\delta \qquad (J/m^2).$$

---

* We wish to thank M. Sc. Jarosław Witek for his assistance in the experiments

The surface under the curve was determined with a digital picture analyser.

Acoustic emission during splitting test was measured with an acoustic emission analyser EA - 3 (Techpan-Warszawa). Amplification of measurement track was set at 90 dB and initial amplitude of the signal at 0.1 V. Such parameters of the measurement track eliminated all disturbances in measuring AE signal resulting from work of the testing machine. For collecting AE signals a narrow band piezoelectric transducer with resonance frequency 200 kHz was used. A PC AT computer registered AE parameters.

RESULTS

Exemplary curves describing relationship between fracture force and wide of crack opening in the wood splitting test and increasing of acoustic emission are given in fig. 2. Analysis of the course of the rise in splitting force and acoustic energy activity indicated that the first AE signals appeared at the force of 80 - 90% of the force on the proportionality limit.

Mean values and standard deviation of the specific fracture energy in the splitting test and of acoustic emission generated during this test are given in table 1. The table includes mean specific total fracture energy ($\overline{G}_f$)and mean initial splitting energy ($\overline{G}_f$*)to the moment of rapid crack propagation. The values of the initial splitting energy can be

Table 1

Tabela 1

Specific fracture energy and acoustic emission activity in the splitting test of selected wood species

Właściwa energia pękania oraz aktywność emisji akustycznej w próbie łupliwości wybranych gatunków drewna

Species of wood Gatunek drewna	Plane of crack propagation Płaszczyzna pękania	Wood density Gęstość drewna ρ_o (kg/m^3)	Specific fracture energy Właściwa energia pękania $\overline{G}_f$ (J/m^2)	$\overline{G}_f^*$	Acoustic emission activity Aktywność emisji akustycznej $\overline{EA}$ (counts, zliczenia, x 10^3)	$\overline{EA}^*$
Pine Sosna	TL RL	528±40 544±21	119.0±16.8 126.8±20.2	25.2± 9.0 33.3± 6.5	835± 95.8 833± 95.0	41±19.8 95±30.5
Oak Dąb	TL RL	618± 5 690± 7	222.0±32.9 119.5±21.1	86.8±29.7 31.4± 8.2	416±182.9 551±105.2	19±12.9 18± 9.3
Beech Buk	TL RL	636±11 702± 8	176.2±26.6 128.3± 9.2	36.3±10.1 16.3±12.5	498±142.9 772±106.2	4± 3.1 38±30.3

$\overline{G}_f$ – average total specific fracture energy
średnia całkowita energia pękania

$\overline{G}_f^*$ – average fractional specific fracture energy
średnia częściowa właściwa energia pękania

$\overline{EA}$ – average total AE activity
średnia całkowita aktywność EA

$\overline{EA}^*$ – average fractional AE activity [illegible]
średnia częściowa aktywność [illegible]

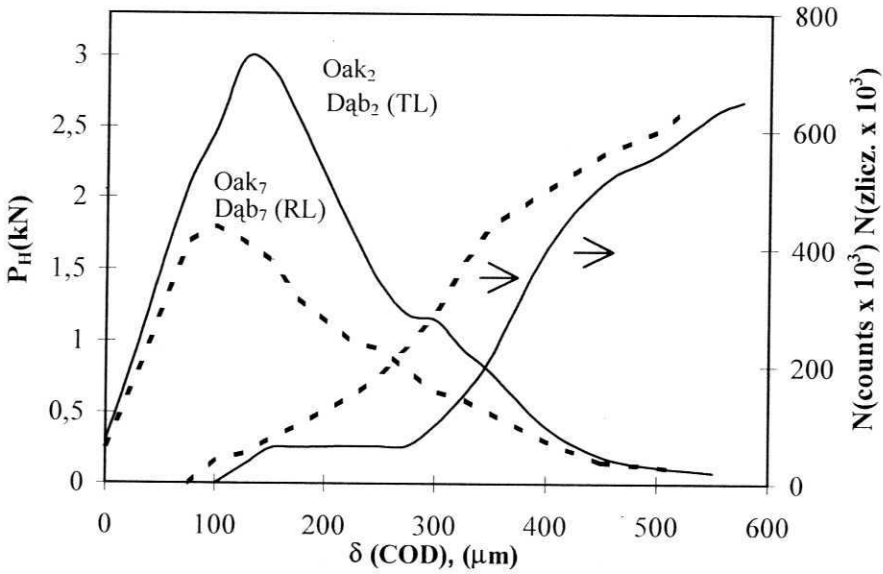

Fig. 2. Relationship between horizontal force (P_H) and width of crack opening δ (COD) and cumulative counts (N) of acoustic emission at splitting oak wood samples in tangential (TL) and radial (RL) planes

Rys. 2. Zależność między siłą poziomą (P_H) i rozwarciem szczeliny pęknięcia δ (COD) oraz sumą zliczeń (N) emisji akustycznej w próbie rozłupywania próbek drewna dębu w płaszczyźnie stycznej (TL) i promieniowej (RL)

approximately treated as identical to the energy needed to initiate splitting. Difference between ($\overline{G}_f$) and ($\overline{G}_f$*) determines energy of crack propagation. Concerning acoustic emission, table 1 contains data on the mean total $\overline{AE}$ activity and mean $\overline{AE}^*$ activity up to appearance of the maximal force.

Energy required to initiate sample splitting ($\overline{G}_f$*) constitutes only a part (on average about 10 to 40%) of the total fracture energy. There is a positive rectilinear correlation (r=0.896) between the total fracture energy and the energy needed to initiate a crack.

For oak and beech wood the splitting energy is clearly dependent on the crack plane course. For tangential plane (TL) the energy is higher than for the radial one (RL). Practiculary pronounced differentiation (from 2.5 to 2.8 times) is observed for the initial splitting energy (G_f*) to maximal splitting force occurrence. In pine wood the total fracture energy is practically independent from the crack plane. The energy initiating splitting is in this case even clearly higher for the radial plane (RL) than for the tangential (TL) one.

Relationship between acoustic emission activity and total fracture energy is illustrated in fig. 3. This relationship is a negative rectilinear correlation. With the increase in splitting energy the cumulative AE count decreases. Hence, the lower fracture energy the higher AE activity in the wood splitting test. This would suggest that low fracture energy at high acoustic emission is related to lower cohesion of wood structure, i.e. to its greater heterogeneity (Schniewind 1989, Raczkowski et al. 1992, 1994).The relationship given in

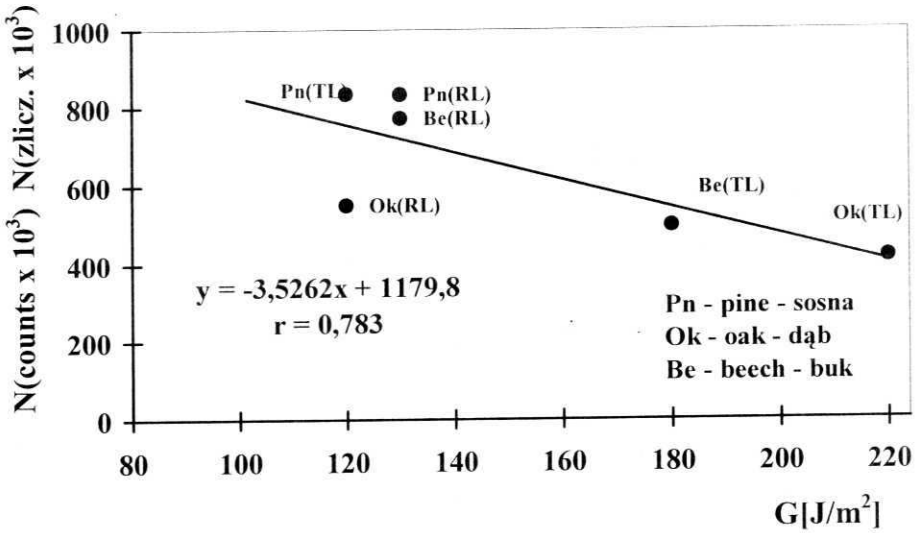

Fig. 3. Relationship between average activity of acoustic emission (N) and average specific splitting energy (G_f) of wood of the tested species

Rys. 3. Zależność między średnią aktywnością energii akustycznej (N) i średnią właściwą energią pękania drewna (G_f) badanych gatunków

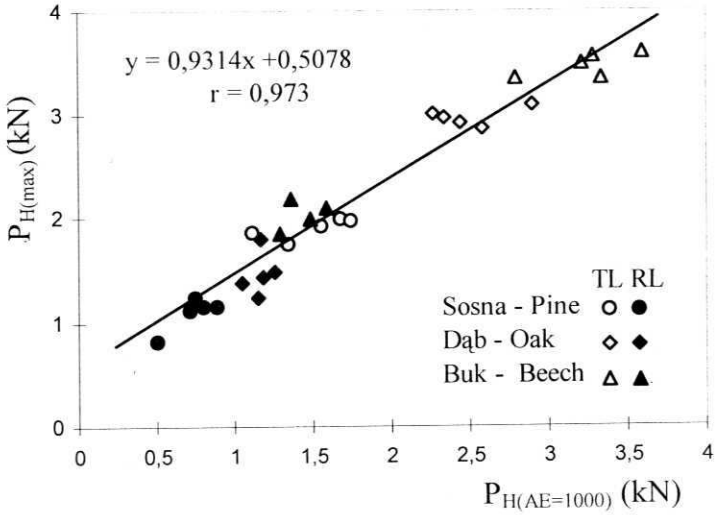

Fig. 4. Relationship between destructive force ($P_{H(max)}$) and threshold force generating 1000 AE counts ($P_{AE=1000}$) in wood splitting test

Rys. 4. Zależność między siłą niszczącą ($P_{H(max)}$) i siłą progową wzbudzającą 1000 zliczeń EA ($P_{EA=1000}$) w próbie rozłupywania drewna

fig. 4 deserves particular attention. It illustrates the relation between destructive force ($P_{H(max)}$) and, so called, threshold force inducing 1000 AE counts. From this relationship it is possible to accurately estimate, in a non-destructive way, the force causing sample fracture at a known value of the force generating 1000 signals of acoustic emission.

Resistance to fracture is generally higher in the tangential plane (TL) than in the radial one (RL). This differentiation of the resistance to fracture depending on split plane is observed mainly in case of greater proportion of wood rays. Wood rays in the cells elongated along ray axes constitute elements resembling reinforcement rods in concrete which reinforce wood in tangential plane. Fracturing wood in this plane (TL) requires application of additional energy for breaking wood rays along their axes. Hence, it results that with an increase in the proportion of wood rays, the fracture energy in tangential plane should rise. To verify this suggestion, correlation between fracture energy and proportion of wood rays in the tested wood species was determined. This correlation is a rectilinear dependence $y = 6.33x + 76.66$, at a very high correlation coefficient $r = 0.951$. Therefore, with the increase in the proportion of wood rays, fracture energy in tangential plane (TL) rises significantly.

CONCLUSIONS

1. Specific total fracture energy (G_f) in the frictionless splitting test of wood is proportional to initial splitting energy (G_f*).
2. Total acoustic emission activity is inversely proportional to total fracture energy.
3. Correlation between the maximal value of splitting force and threshold force inducing 1000 counts of acoustic emission impulses is rectilinear and has very high correlation coefficient (r=0.973).
4. Total fracture energy is, as expected, dependent on wood structure and orientation of crack planes with respect to wood symmetry planes.
5. With an increase in proportion of wood rays, fracture energy in tangential plane increases in a rectilinear way.

Received in September 1997

LITERATURE

Bažant Z. P. (1992): Fracture mechanics of concrete structures. Elsevier Applied Sci., London and New York.

Ehard R. J. A., Stanzl-Tschegg S. E., Tschegg E. K. (1996): Characterization of crack propagation in particleboard. Wood Sci. and Technol., 30(5):307-321.

Raczkowski J., Moliński W., Ranachowski Z. (1992): Emisja akustyczna w drzewnictwie. Prace IPPT PAN, Warszawa.

Raczkowski J., Moliński W., Ranachowski Z. (1994): Acoustic emission in fracture mechanics of wood. Mech. Teoret. i Stosowana 32(2):299-322.

Schniewind A. P. (Ed.) (1989): Concise encyclopedia of wood and wood-based materials. Pergamon Press, Oxford.

Stanzl-Tschegg S. E., Tschegg E. K., Teischinger A. (1994): Fracture energy of spruce wood after different drying procedures. Wood and Fiber Sci., 26(4):467-478.

Stanzl-Tschegg S. E., Tan D. M., Tschegg E. K. (1995): New splitting method for wood fracture characterization. Wood Sci and Technol., 29(1):31-50.
Tan D. M., Stanzl-Tschegg S. E., Tschegg E. K. (1995): Models of wood fracture in mode I and mode II. Holz als Roh- und Werkst., 53(3):159-164.
Tschegg E. K. (1991): New equipment for fracture tests on concrete. Materialprüfung 33(11-12):338-342.

ZALEŻNOŚĆ MIĘDZY ENERGIĄ ZNISZCZENIA I AKTYWNOŚCIĄ EMISJI AKUSTYCZNEJ W PRÓBIE ŁUPLIWOŚCI DREWNA

Streszczenie

Przeprowadzono badania zmierzające do bliższego poznania zależności między budową drewna i energią zniszczenia (pękania) oraz aktywnością emisji akustycznej wzbudzanej w próbie beztarciowej łupliwości. Doświadczenia wykonano na próbkach drewna sosny (*Pinus sylvestris* L.) dębu (*Quercus petraea* Liebl.) i buka (*Fagus sylvatica* L.) rozłupywanych w płaszczyźnie stycznej (TL) i promieniowej (RL). Próbę łupliwości przeprowadzono według metody opracowanej przez Elmara Tschegg'a z Uniwersytetu Technicznego w Wiedniu i Stefanie Stanzl-Tschegg z Uniwersytetu Rolnego w Wiedniu.

Właściwa całkowita energia zniszczenia (G_f) w próbie beztarciowej łupliwości drewna jest proporcjonalna do energii zapoczątkowującej pękanie (G_f*). Całkowita aktywność emisji akustycznej jest odwrotnie proporcjonalna do całkowitej energii zniszczenia. Korelacja między maksymalną wartością siły rozłupującej i siłą progową wzbudzającą 1000 zliczeń impulsów emisji akustycznej jest prostoliniowa i odznacza się wysokim współczynnikiem korelacji. Wskazuje to na możliwość nieniszczącego wyznaczania całkowitej energii zniszczenia drewna przy znanej wartości siły progowej. Energia zniszczenia jest zgodnie z oczekiwaniem zależna od budowy drewna, a zwłaszcza od orientacji płaszczyzny pękania w stosunku do płaszczyzn symetrii drewna. Wraz ze wzrostem udziału promieni drzewnych zwiększa się prostoliniowo energia zniszczenia w płaszczyźnie stycznej.

Authors' address:
Prof. dr hab. Jan Raczkowski
Dr inż. Waldemar Moliński
Akademia Rolnicza im. A. Cieszkowskiego w Poznaniu
Katedra Nauki o Drewnie
60-627 Poznań, ul. Wojska Polskiego 38/42
POLAND